BEHRINGER®

Mounting Brackets for Accumulators, Cylinders and Filter Housings

Behringer mounting brackets are designed to provide simple and secure mounting for accumulators, cylinders and filter housings.

Special features include:

- **Rubber cushioning** to reduce vibration and noise.
- **Compensation for thermal expansion and contraction.**
- **Exclusively designed for all types of accumulators, cylinders and filter housings.**
- **Clear Zinc plated** to resist corrosion.
- **Special sizes, designs and materials** (including stainless steel) available upon request.

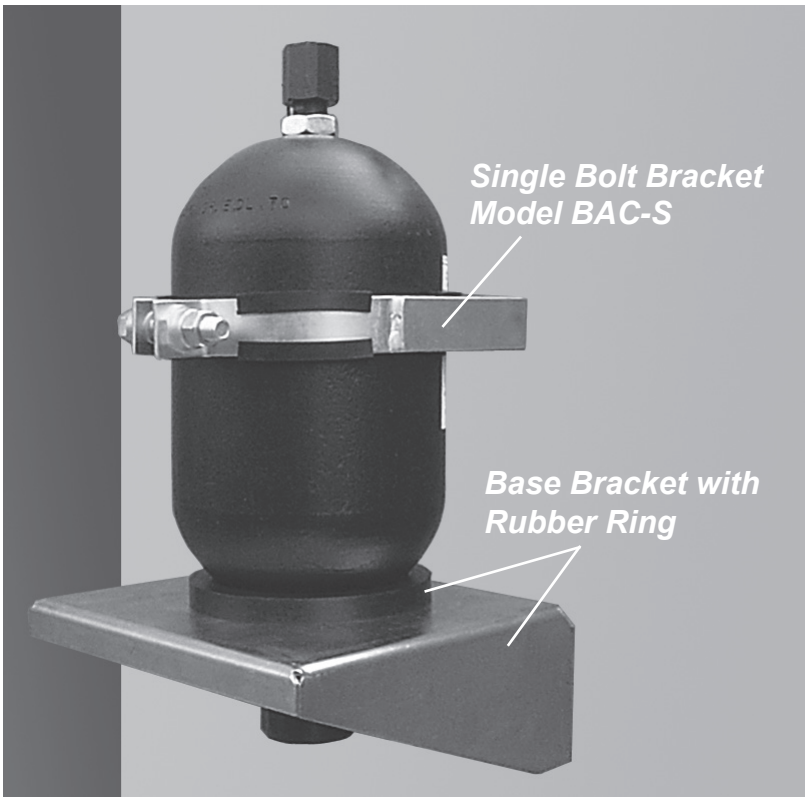

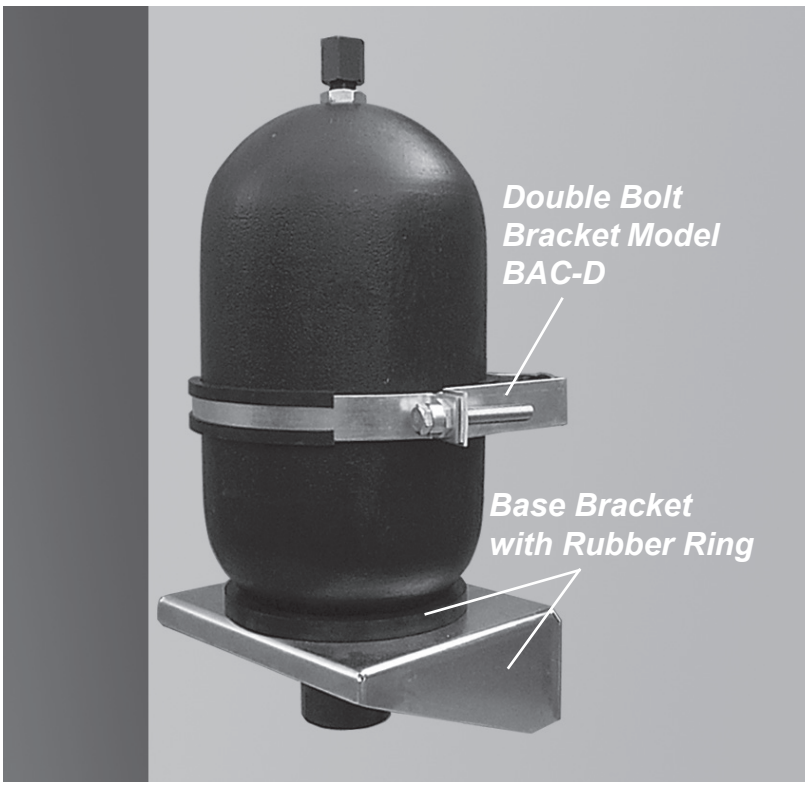

Behringer Corporation • 17 Ridge Rd., Branchville, NJ 07826
P:(973)948-0226 • F:(973)948-2562 • W:behringersystems.com • E:sales@behringersystems.com

BEHRINGER®

Behringer Mounting Brackets for Accumulators, Cylinders, and Filter Housings

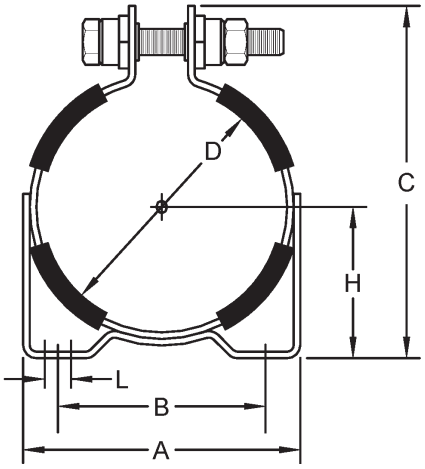

Single Bolt Bracket Model BAC-S

Model	A in. (mm)	B in. (mm)	C in. (mm)	D (Dia.) in. (mm)	H* in. (mm)	L (Slot) in. (mm)	Width in. (mm)	Wt. lbs. (kg)
BAC-S42	5.43 (138)	3.94 (100)	5.91 (150)	4.25 (108)	2.52 (64)	.38 x .50 (9.7 x 12.7)	1.25 (32)	1.6 (.73)
BAC-S445	5.12 (130)	3.94 (100)	6.68 (170)	4.51 (115)	2.65 (67)	.38 x .50 (9.7 x 12.7)	1.25 (32)	1.8 (.82)
BAC-S45	5.26 (134)	3.94 (100)	6.68 (170)	4.51 (115)	2.87 (73)	.38 x .50 (9.7 x 12.7)	1.25 (32)	1.8 (.82)
BAC-S50	6.89 (175)	5.35 (136)	7.12 (181)	4.96 (126)	3.03 (77)	.38 x .50 (9.7 x 12.7)	1.25 (32)	1.8 (.82)
BAC-S57	6.63 (168)	5.35 (136)	7.75 (197)	5.75 (146)	3.50 (89)	.38 x .50 (9.7 x 12.7)	1.25 (32)	2.0 (.91)
BAC-S66	7.50 (191)	6.02 (153)	9.00 (229)	6.75 (171)	3.94 (100)	.38 x .50 (9.7 x 12.7)	1.25 (32)	2.3 (1.0)
BAC-S68	7.50 (191)	6.40 (163)	8.90 (226)	6.75 (171)	3.85 (98)	.38 x .50 (9.7 x 12.7)	1.25 (32)	2.3 (1.0)
BAC-S70	8.18 (208)	6.31 (160)	9.38 (238)	7.12 (189)	4.18 (106)	.38 x .50 (9.7 x 12.7)	1.25 (32)	2.2 (1.0)
BAC-S87	10.12 (257)	8.50 (216)	11.38 (289)	9.12 (232)	5.00 (127)	.38 x .50 (9.7 x 12.7)	1.25 (32)	2.8 (1.3)
BAC-S91	10.0 (254)	8.18 (208)	10.75 (273)	9.12 (232)	4.93 (125)	.38 x .50 (9.7 x 12.7)	1.25 (32)	2.8 (1.3)



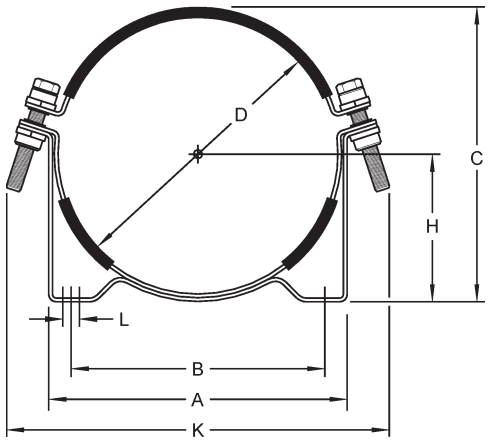

Double Bolt Bracket Model BAC-D

Model	A in. (mm)	B in. (mm)	C in. (mm)	D (Dia.) in. (mm)	H* in. (mm)	K in. (mm)	L in. (mm)	Width in. (mm)	Wt. lbs. (kg)
BAC-D81	10.24 (260)	8.19 (208)	9.06 (230)	8.11 (206)	4.65 (118)	10.83 (275)	.59 (15)	1.50 (38)	3.2 (1.5)
BAC-D84	10.63 (270)	8.50 (216)	9.37 (238)	8.39 (213)	4.84 (123)	11.22 (285)	.59 (15)	1.50 (38)	3.5 (1.6)
BAC-D86	10.55 (268)	8.50 (216)	9.53 (242)	8.63 (219)	4.84 (123)	11.22 (285)	.59 (15)	1.50 (38)	3.4 (1.5)
BAC-D89	10.00 (254)	8.50 (216)	9.89 (251)	9.12 (232)	4.95 (126)	12.48 (317)	.59 (15)	1.50 (38)	3.4 (1.5)
BAC-D99	10.40 (264)	8.50 (216)	10.50 (267)	9.75 (248)	5.31 (135)	12.99 (330)	.59 (15)	1.50 (38)	3.4 (1.5)
BAC-D113	13.07 (332)	11.02 (280)	12.40 (315)	11.26 (286)	6.42 (163)	13.98 (355)	.59 (15)	1.50 (38)	4.1 (1.8)
BAC-D122	13.07 (332)	11.02 (280)	13.15 (334)	12.21 (310)	6.69 (170)	14.96 (380)	.59 (15)	1.50 (38)	4.4 (2.0)
BAC-D141	16.81 (427)	14.37 (365)	15.08 (383)	14.13 (359)	7.68 (195)	16.69 (424)	.59 (15)	1.50 (38)	5.5 (2.4)



Behringer Corporation • 17 Ridge Rd., Branchville, NJ 07826
P:(973)948-0226 • F:(973)948-2562 • W:behringersystems.com • E:sales@behringersystems.com

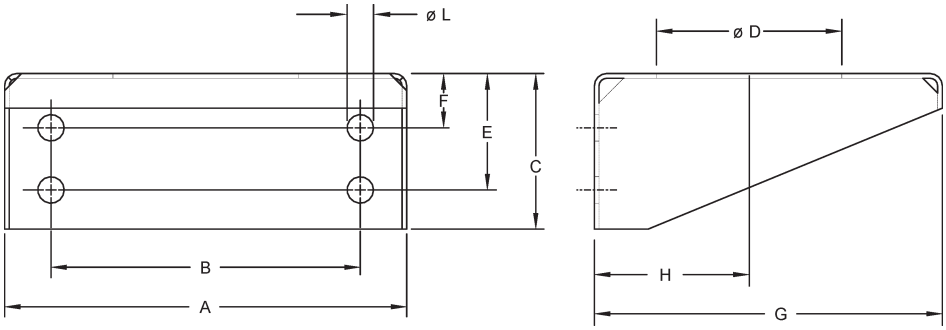

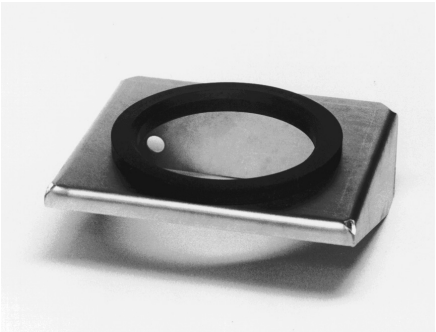

Base Bracket (without Rubber Ring)

Model	A in. (mm)	B in. (mm)	C in. (mm)	D (Dia.) in. (mm)	E in. (mm)	F in. (mm)	G in. (mm)	H in. (mm)	L (Dia.) in. (mm)	Wt. lbs. (kg)
BAC-BB47	10.24 (260)	7.87 (200)	3.94 (100)	4.72 (120)	2.95 (75)	1.38 (35)	8.86 (225)	3.94 (100)	.67 (17)	5.1 (2.3)
BAC-BB53	10.63 (270)	7.09 (180)	3.94 (100)	5.31 (135)	3.15 (80)	1.57 (40)	9.84 (250)	4.84 (123)	.67 (17)	5.3 (2.4)
BAC-BB67	10.24 (260)	7.88 (200)	3.94 (100)	6.69 (170)	2.95 (75)	1.38 (35)	8.86 (225)	4.84 (123)	.67 (17)	4.5 (2.0)
BAC-BB69	10.20 (259)	7.80 (198)	3.90 (99)	6.69 (170)	2.70 (75)	1.00 (25)	9.00 (228)	5.10 (129)	.75 (19)	4.6 (2.1)
BAC-BB75	12.99 (330)	8.66 (220)	7.87 (200)	7.48 (190)	5.51 (140)	2.36 (60)	13.39 (340)	6.69 (170)	.87 (22)	12.3 (5.6)
BAC-BB83	15.35 (390)	10.63 (270)	9.45 (240)	8.31 (211)	7.09 (180)	2.36 (60)	15.35 (390)	7.68 (195)	.87 (22)	16.9 (7.7)

When ordering base bracket with rubber ring, add "RR" after base bracket part number.
Example: BB-83RR = Base bracket BB-83 with Rubber Ring RR-787.

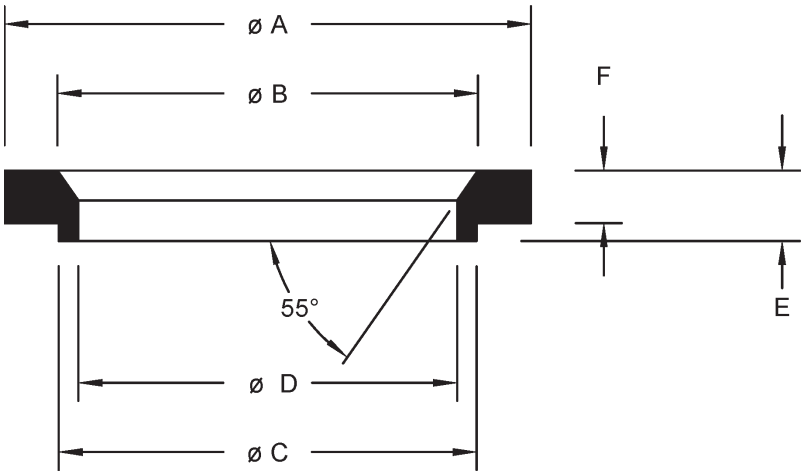



Rubber Ring

Model	A in. (mm)	B in. (mm)	C in. (mm)	D (Dia.) in. (mm)	E in. (mm)	F in. (mm)	Use with Base Bracket No.
BAC-RR425	5.91 (150)	4.72 (120)	4.69 (119)	4.25 (108)	.79 (20)	.59 (15)	BB-47
BAC-RR625	7.87 (200)	6.69 (170)	6.65 (169)	6.26 (159)	.79 (20)	.59 (15)	BB-53, -67, -69
BAC-RR787	9.84 (250)	8.66 (220)	8.27 (210)	7.87 (200)	.98 (25)	.79 (20)	BB-75, -83

Behringer Corporation • 17 Ridge Rd., Branchville, NJ 07826
P:(973)948-0226 • F:(973)948-2562 • W:behringersystems.com • E:sales@behringersystems.com